Yoswit Smart 0-10V Dimmer Switch Module Datasheet

Model: YO619v (R2W) Revised: 01-12-2024



Unlock Precision Lighting Control

Yoswit Smart 0-10V Dimmer Switch Module features a mini design that hides in the wire box, effortlessly replacing your original wall switches while allowing you to control your lights through the Yoswit app. It ensures precise lighting with its 0/1-10V dimming design. Featuring brightness adjustment, scene modes, and high adjustment accuracy, it offers unparalleled lighting control and energy efficiency through low power consumption. The built-in timer allows convenient scheduling and control of your lightings for enhanced convenience. It offers compatibility with various third-party smart home systems and integrates smoothly with smart speakers. With its built-in WiFi serving as a central gateway, it seamlessly connects with other Yoswit products, empowering remote management of both Yoswit products and lightings through our Yoswit App, simplifying the interaction with your smart devices.

Connection :

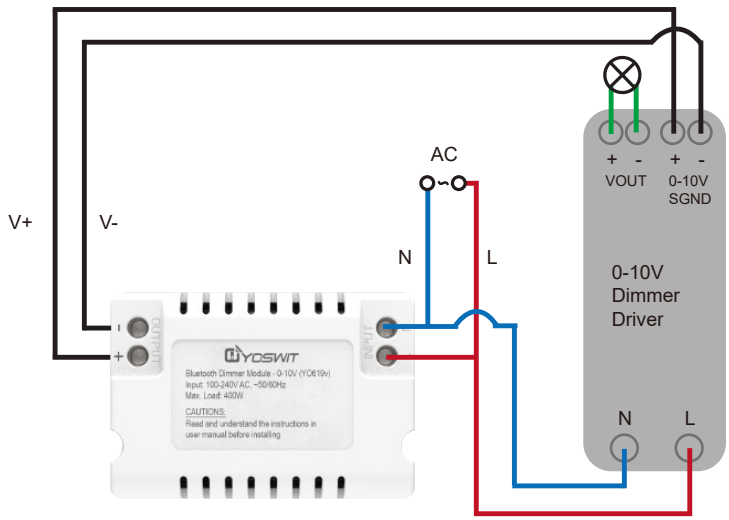

Key Features and Benefits

- No Switch Box Dependency
- 0/1-10V Dimming Design for Precise Lighting Control
- Scene Modes for Setting Different Lighting Scenarios
- Low Power Consumption
- Built-in Timer for Automation
- Outdoor Remote Control via Yoswit App

Various Customized Products

We offer a comprehensive selection of smart home products that are seamlessly adapted to the usage standards and various socket types in different countries, ensuring a smooth installation process for all users. With extensive compatibility, our products enable you to control a diverse range of household appliances, including lighting, air conditioning, and TV.

Light Switch | Dimmer Switch | 2 Way Switch | Double Pole Switch | Gate Controlled Switch | Hidden Controlled Switch | Outlet | Roller | Curtain | Remote Control | Thermostat

Yoswit App

You can download our app to implement the following functions via Bluetooth and WiFi to control the Yoswit switches.



SCAN THE QR CODE TO DOWNLOAD
YOSWIT APP

Product Specifications

Specifications:

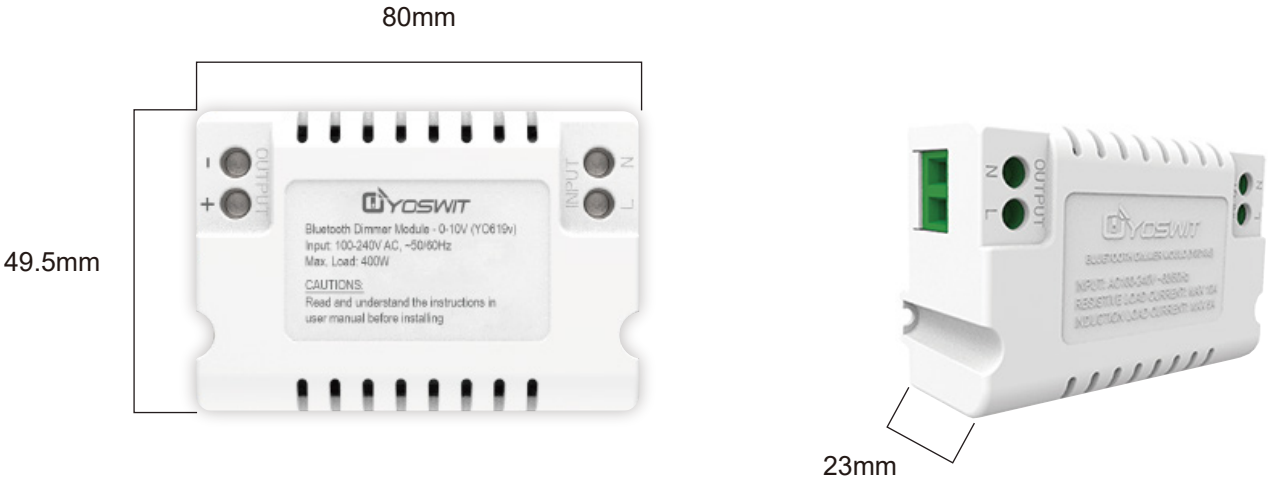

Electrical	
Input Voltage	100-240V AC (50/60Hz)
Frequency	60/50Hz Auto Detected at Power-up
Resistive Load Current	Max. 400W
Inductive Load Current	Max. 400W
Standby Power	<0.1W

Wireless	
Frequency	2.4GHz
Connection	Wifi 2.4G / BLE 4.2
Range	Open Area: >50m / Interior: 3-20m

General Specifications

Product Name	Yoswit Smart 0-10V Dimmer Switch Module
Model	YO619v (R2W)
EAN / UPC	EAN: 0765756498180 / UPC: 765756498180
Revision	V1.0
Compliance	CE, FCC, RoHS
Manufacturer	Designed by Yoswit in Hong Kong, China / Assembled in Guangdong, China
Warranty	Two Year Limited Warranty (*Details available on the Product Warranty and Limitations of this datasheet)

Mechanical

Storage Conditions	-20°C to 60°C
Operation	APP
Operating Temperature	-10°C to 50°C
Operating Humidity	0-90% RH, Non-Condensing

Product Package

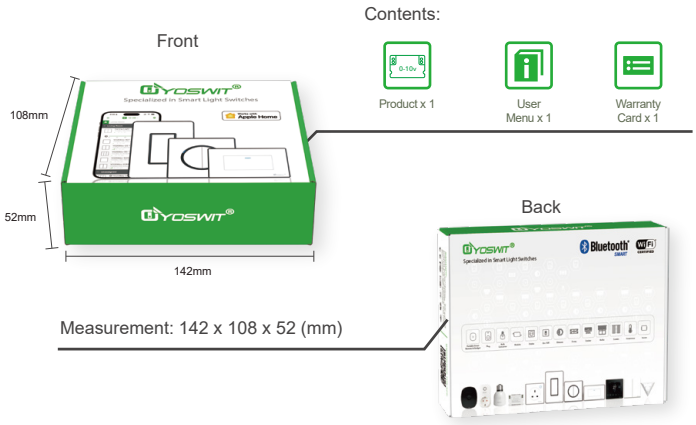

Outer Box



Quantity Per Box: 40 Pack / Box
Measurement: 58 x 31 x 23.5 (cm)

Product Warranty and Limitations

Yoswit brand products guarantee for a period of 2 years warranty from the date of purchase. During the warranty period and in the event that a defective product is identified (non-human factors), Yoswit will provide free maintenance. Damage beyond the warranty period or caused by improper use is not covered within the warranty, Yoswit will not bear any responsibility for repair, and will still provide users with a lifelong maintenance of paid services. If the products need to be repaired or returned to our company, an appropriate fee should be charged based on specific situation to cover the cost of replacement. Regardless of the warranty status, all shipping costs are borne by users.

LINCOGN TECHNOLOGY CO. LIMITED

Address: Room 202, 2/F, Building No. 19 West Science and Technology Avenue, Science Park, Shatin, N.T., Hong Kong
info@yoswit.com | Tel: (852) 3996 9396 | Fax: (852) 3119 8778 | www.yoswit.com